Combustion Package - Replacement Instructions
TL300 / 300i / Oakwood

HARMAN
BUILT TO A STANDARD, NOT A PRICE

The following are instruction on how to properly replace the **TL300** combustion package. **Note:** The combustion package must be removed from the rear of the unit.

1. Slightly lift up on both side panels to release tabs from the stove body. Figure 1.

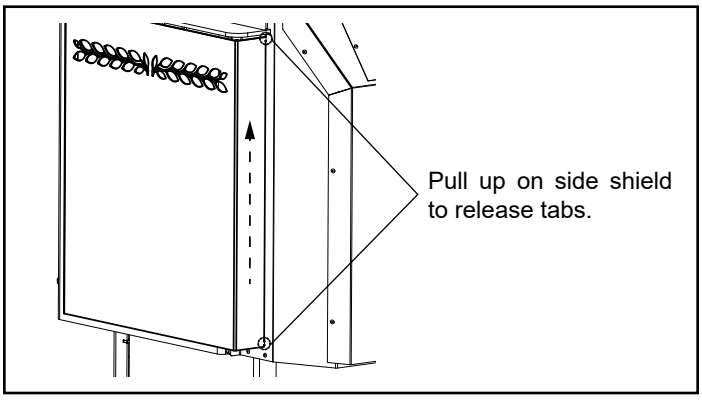

Figure 1

2. Remove (4) 1/4”-20 X 3/8” flange bolts. Figure 2.

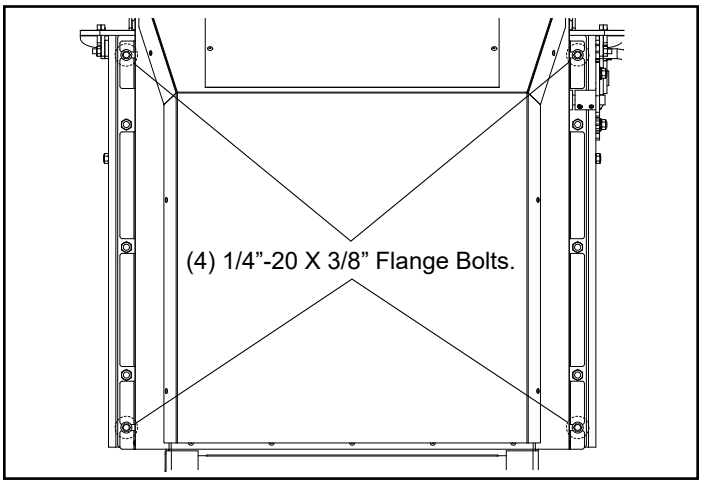

Figure 2

3. Remove (12) 1/4”-20 X 1/2” flange bolts and remove rear cover. Figure 3.

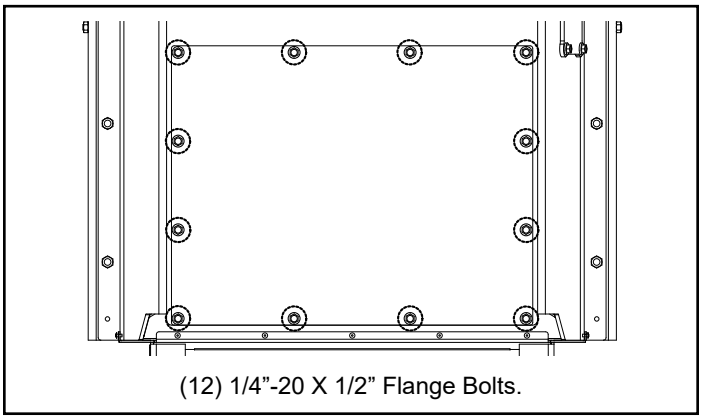

Figure 3

4. Slowly pull on combustion package and remove from the combustion cavity. Figure 4.

Note: There is a sheet metal cap located on the top of the combustion package. Discard this piece as there is a new one in the replacement kit. Figure 5.

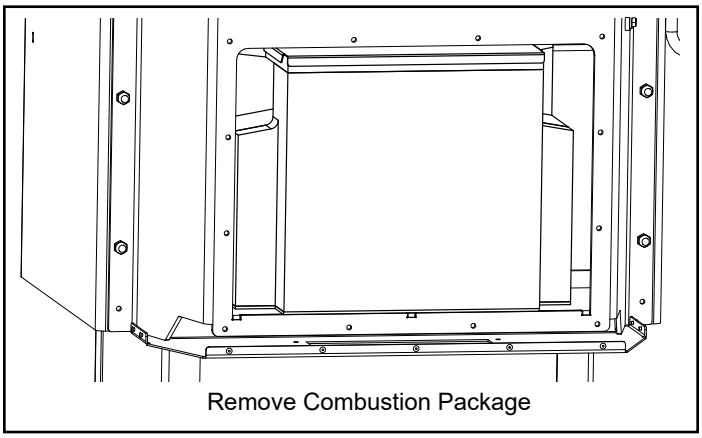

Figure 4

5. Before placing the new combustion package in the unit, be sure to place the combustion package cap on the combustion package. **Note:** The brick located in the firebox may be removed but is not necessary.

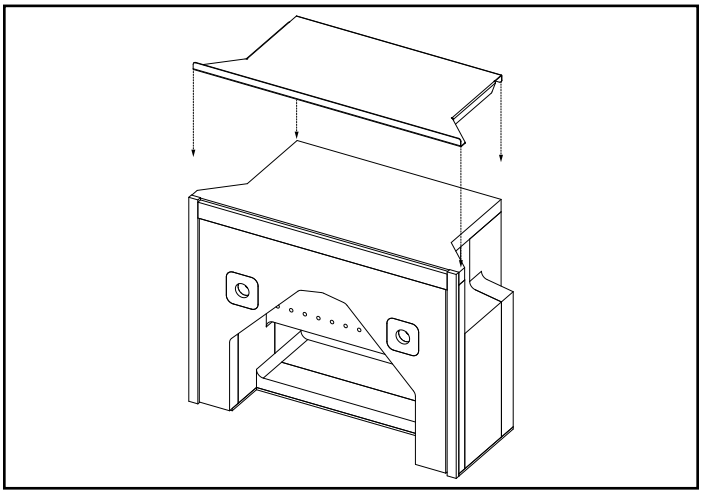

Figure 5

6. Slide the new combustion package into the unit and make sure it uniformly contacts seal plates.

The combustion package will protrude slightly from the rear of the unit, but will be pushed flat as the rear cover is reinstalled and the bolts are tightened.

7. Once combustion package is in place, re-install the combustion package cover tightening the bolts in a criss-cross pattern to insure even pressure against the combustion package followed by the rear air jacket, right side shield and left side shield.

The following are instruction on how to properly replace the **300i** combustion package. **Note:** The combustion package must be removed from the rear of the unit.

Remove unit from fireplace so you can gain access to the rear of the unit.

1. Once the unit is removed from the fireplace you will need to remove the rear air jacket by removing (6) #10 Tek screws. There are (3) located on each side. Figure 1.

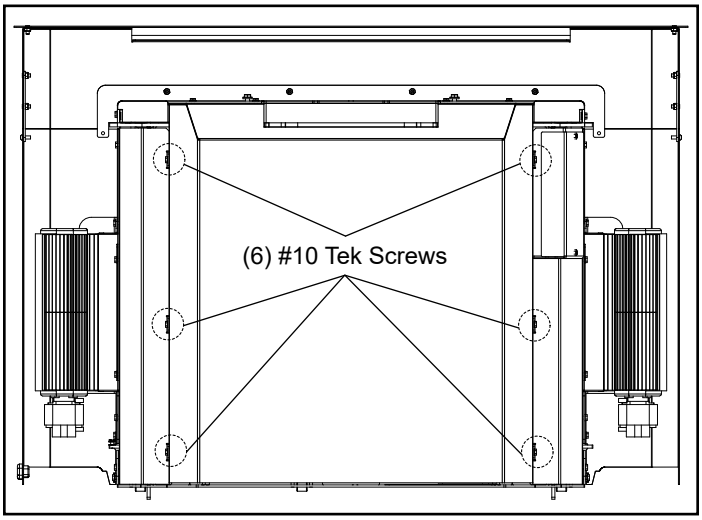

Figure 1

Remove (4) 1/4”-20 X 3/8” flange bolts. Figure 2.

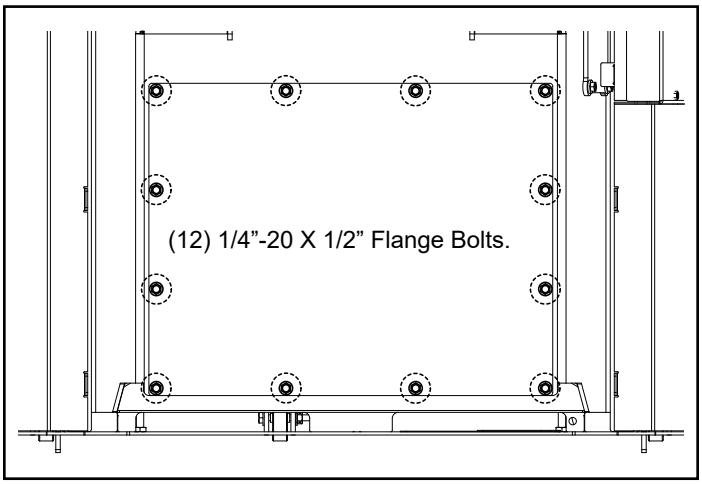

Figure 2

2. Slowly pull on combustion package and remove from the combustion cavity. Figure 3.

Note: There is a sheet metal cap located on the top of the combustion package. Discard this piece as there is a new one in the replacement kit. Figure 4.

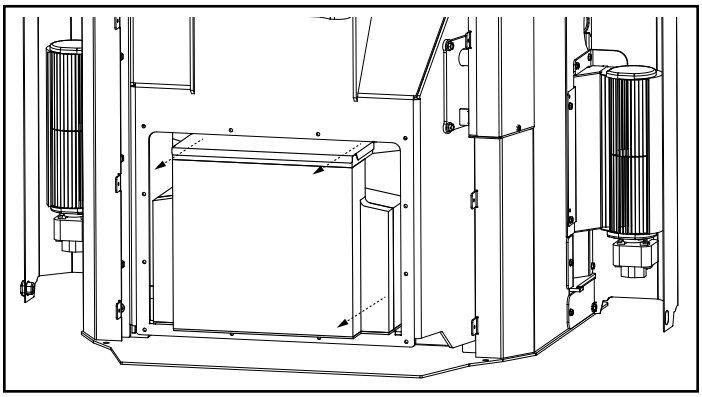

Figure 3

3. Before placing the new combustion package in the unit, be sure to place the combustion package cap on the combustion package. **Note:** The brick located in the firebox may be removed but is not necessary.

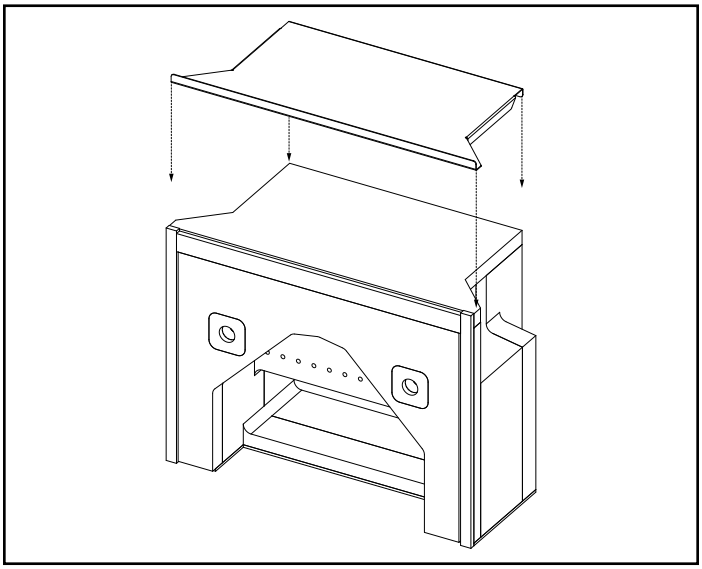

Figure 4

4. Slide the new combustion package into the unit and make sure it uniformly contacts seal plates.

The combustion package will protrude slightly from the rear of the unit, but will be pushed flat as the rear cover is reinstalled and the bolts are tightened.

5. Once combustion package is in place, re-install the combustion package cover tightening the bolts in a criss-cross pattern to insure even pressure against the combustion package followed by the rear air jacket.

The following are instruction on how to properly replace the **Oakwood** combustion package. **Note:** The combustion package must be removed from the rear of the unit.

The venting may need to be removed depending on the installation.

1. Once the venting is removed, if needed, you will need to remove the rear housing by removing (8) 1/4-20 x 5/8" BHSC and (1) 1/4-20 x 3/4" BHSC. Figure 1.

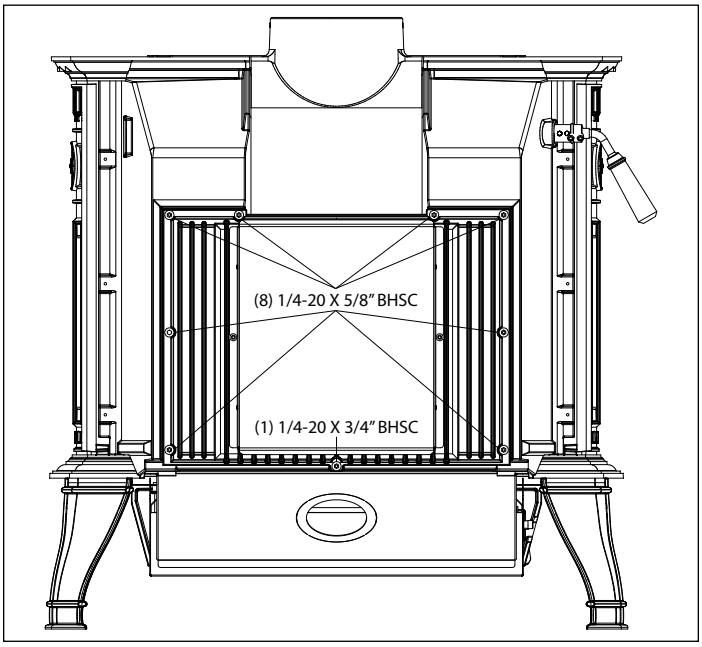

Figure 1

2. Slowly pull on combustion package and remove from the combustion cavity. Figure 2.

Note: There is a sheet metal cap located on the top of the combustion package. Discard this piece as there is a new one in the replacement kit. Figure 3.

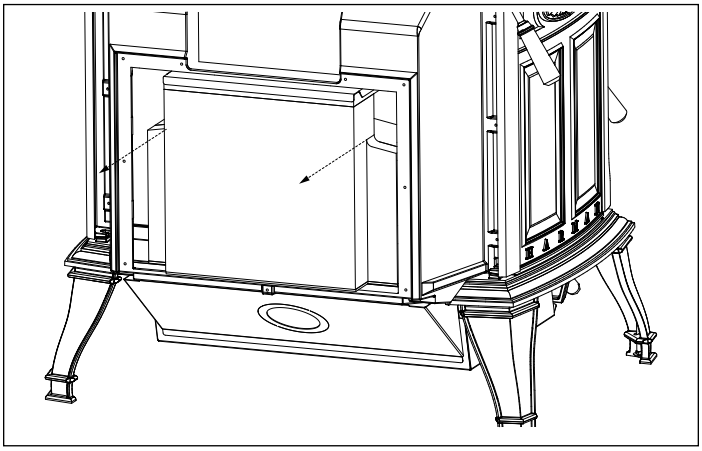

Figure 2

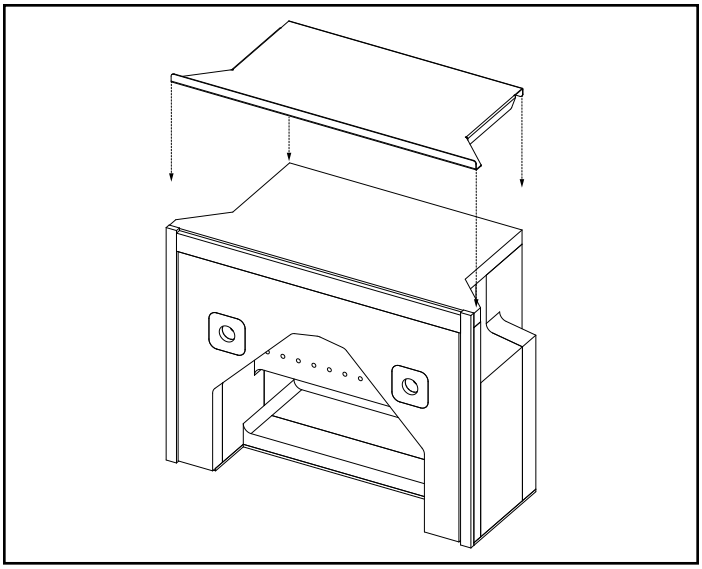

Figure 3

3. Slide the new combustion package into the unit and make sure it uniformly contacts seal plates.

The combustion package will protrude slightly from the rear of the unit, but will be pushed flat as the rear cover is reinstalled and the bolts are tightened.

4. Once combustion package is in place, re-install the rear housing tightening the bolts in a cross-cross pattern to insure even pressure against the combustion package.